BAN－BS1 SERIES ・ BAN－A2 SERIES

BAN－BS1 SERIES

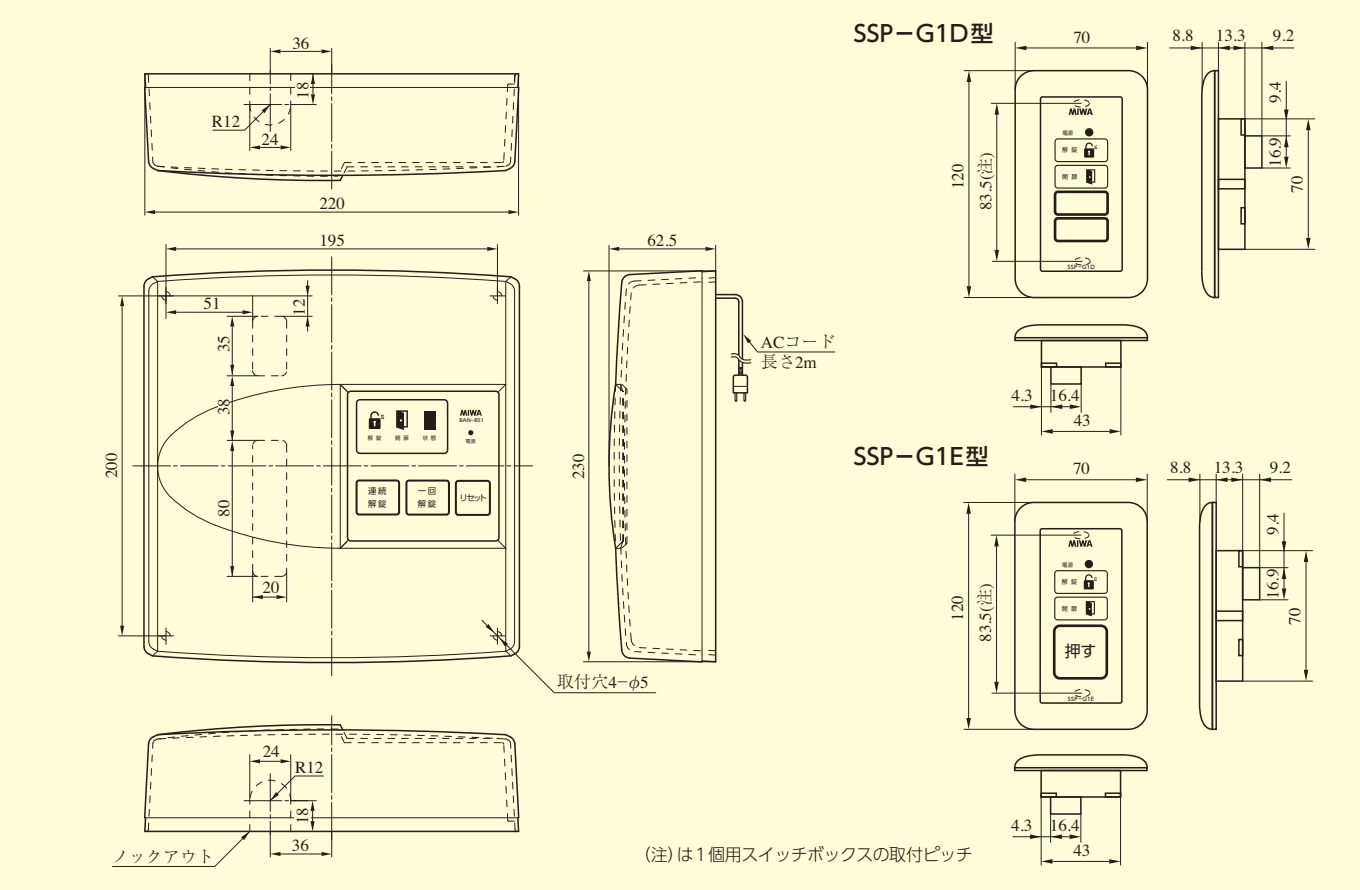
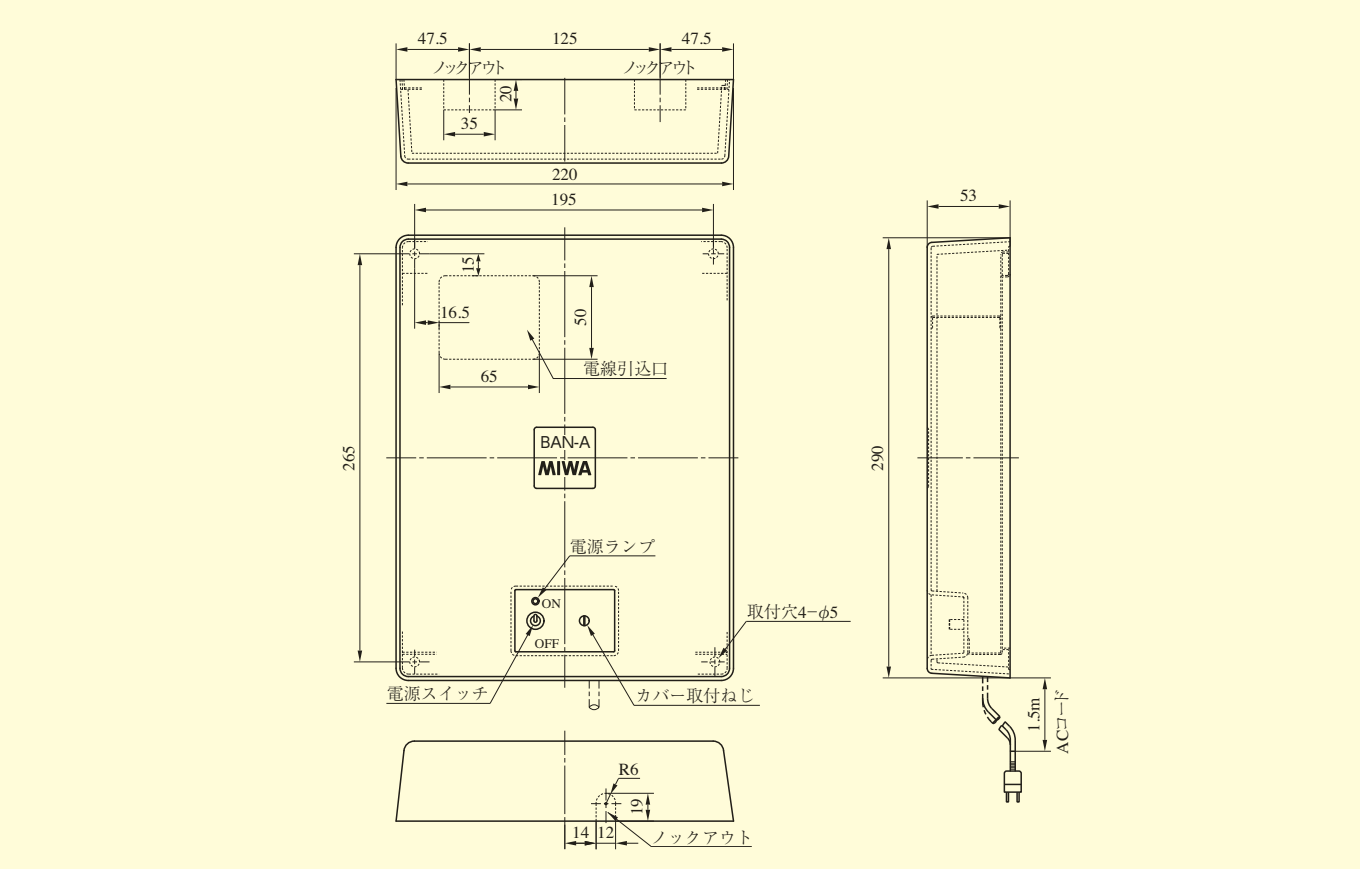
BAN－A2 SERIES